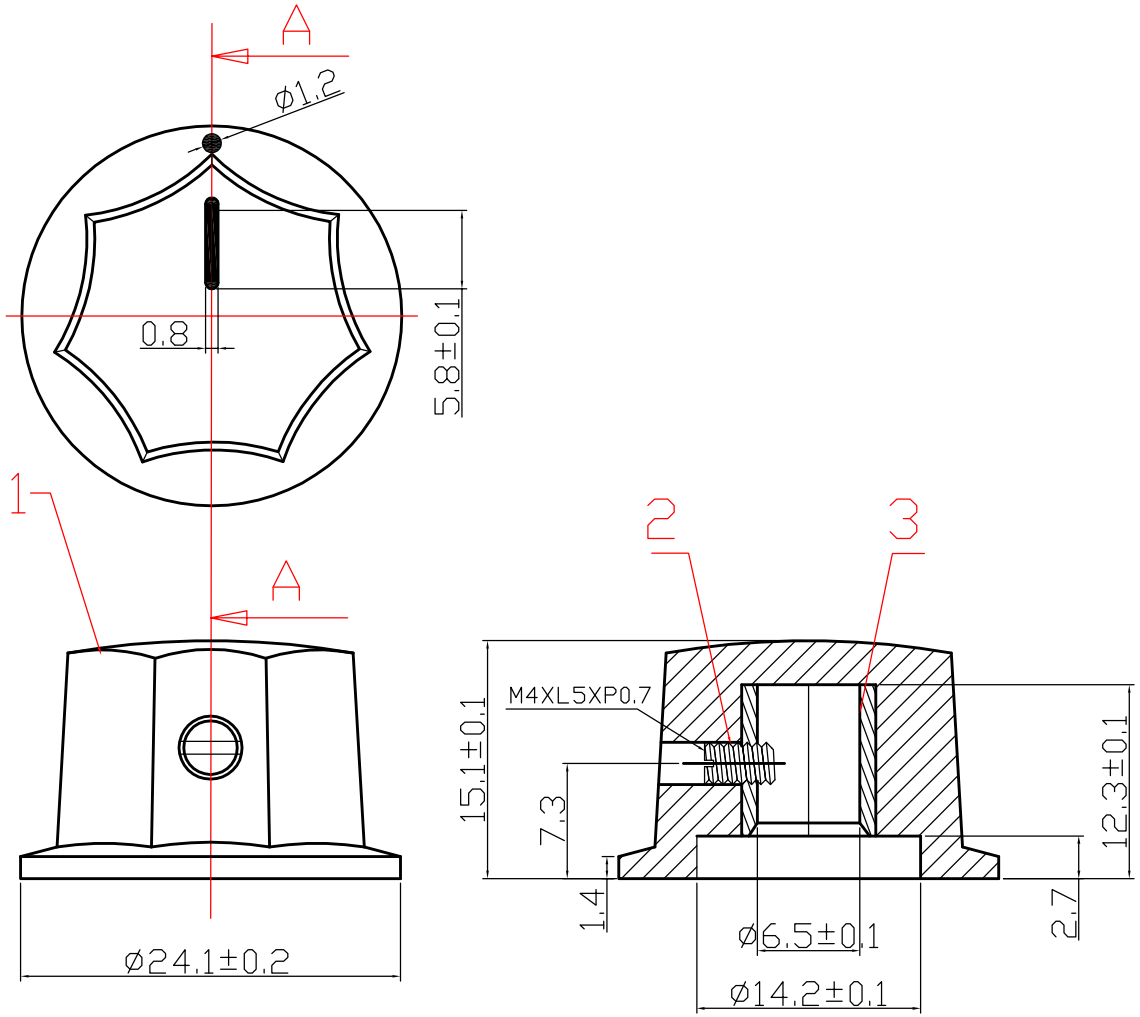

3	SHAFT HOLDER	BRASS	
2	SCREW	BRASS	
1	HOUSE	BAKLITE,BLACK	
ITEM	DESIGNATION	MATERIAL	

REV	PART NO.& SAMPLE NO.	DATE	BY
A	**#9566**		
B			

TOLERANCE	
0 – 10	±0.05
10 – 99	±0.5
100 – 999	±10.0
1000 – 9999	±100.00
10000 – 99999	±1000.00

SIGNATURES		DATE
DRAFT:		09-12-2011
CHECKEO:		
APPROVAL:		
SCALE	UNIT	REV
1:1	mm	ø

SHEET

OF

VITALCO

TITLE: Knobs,Bakelite

CUSTOMER